BBCFP-20 Baseball & SBCFP-200 Softball

20' Collegiate Baseball / Softball Foul Pole

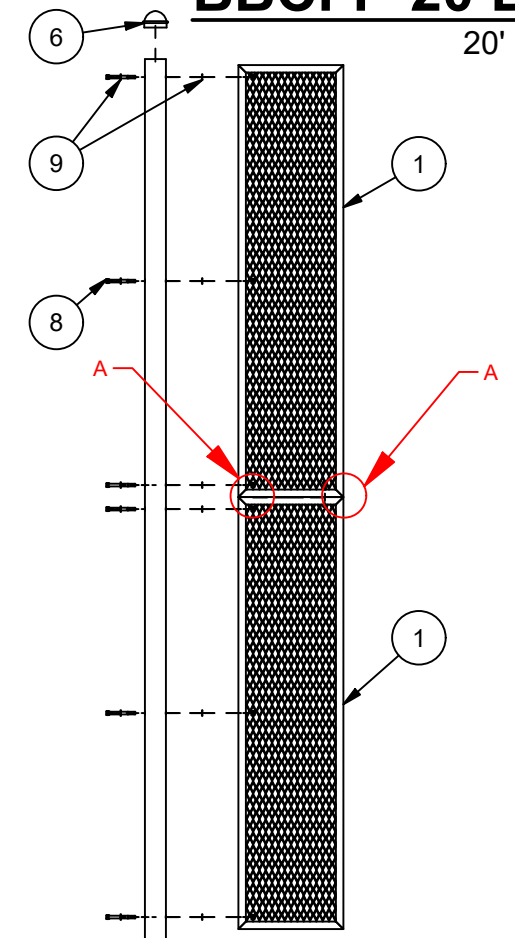

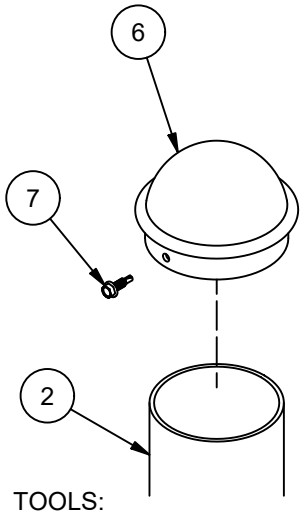

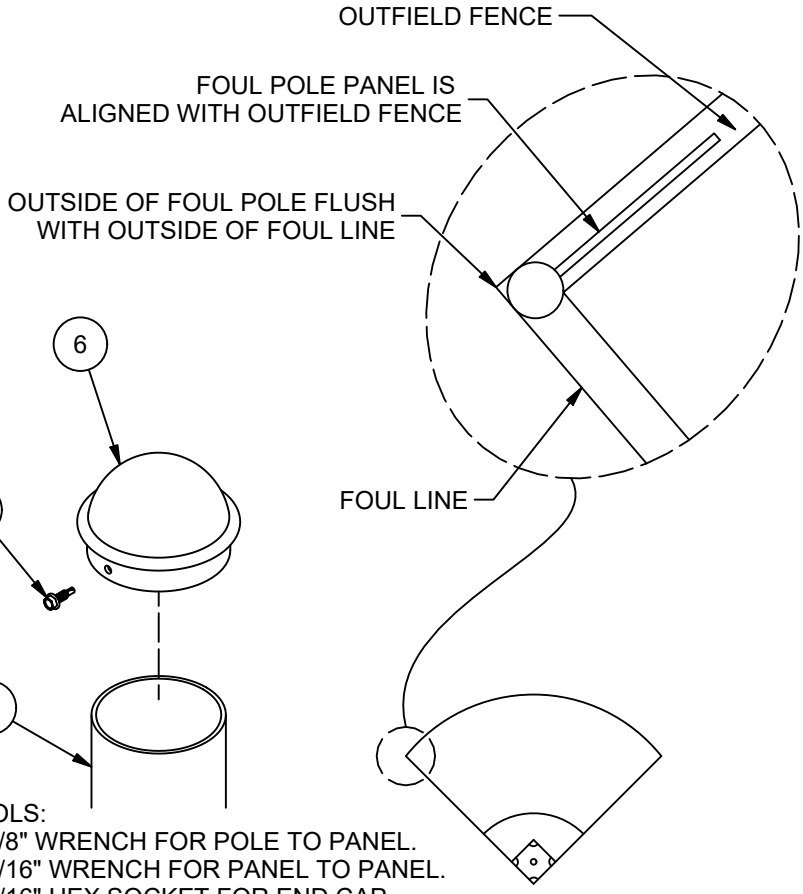

TOOLS:
1) 5/8" WRENCH FOR POLE TO PANEL.
2) 9/16" WRENCH FOR PANEL TO PANEL.
3) 5/16" HEX SOCKET FOR END CAP.

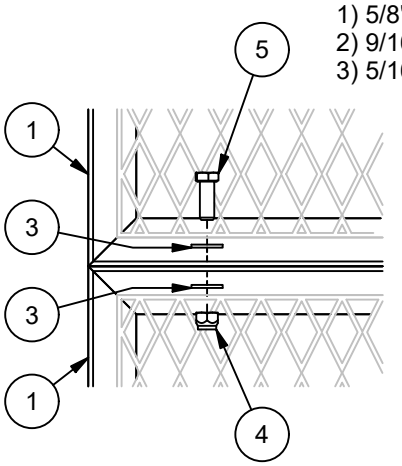

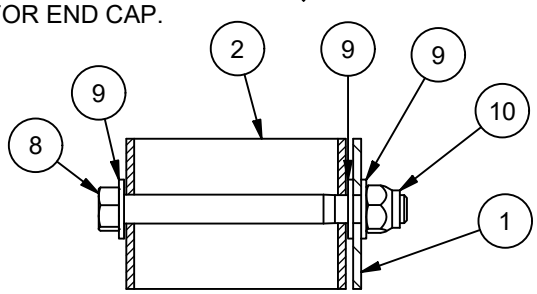

WING PANEL TO POLE UPRIGHT

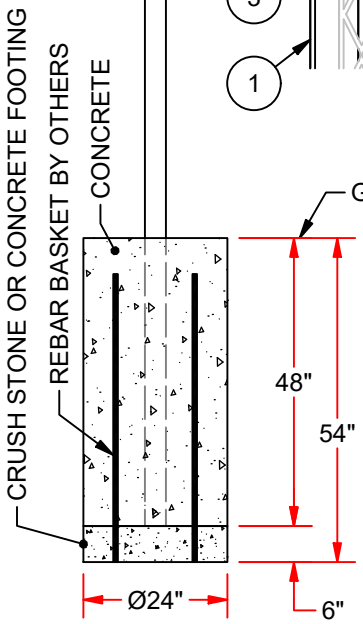

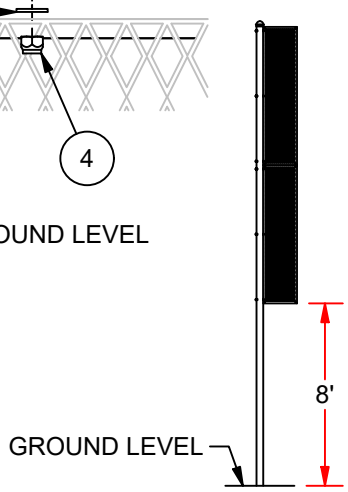

* FOLLOW CONCRETE DETAIL AS SHOWN IF OPTIONAL GROUND SLEEVE IS NOT USED.
* MANUFACTURER RECOMMENDS THE FOOTING BE REINFORCED WITH 6 PIECES OF Ø3/4" x 46" REBAR BASKET AS SHOWN.

Parts List

ITEM	QTY	DESCRIPTION
1	2	BBCFP POLE SCREEN PANEL
2	1	BBCFP-20 SINGLE POLE UPRIGHT
3	4	3/8 SAE WASHER-ZP-GrNC
4	2	3/8-16 UNC-Nylon Lock Nut-ZP-GrNC
5	2	3/8-16 x 1 HEX CAP SCREW-ZP-GrNC
6	1	YELLOW POWDERCOATED CAP FOR 3.5 O.D. TUB
7	1	#12-14 SELF-DRILLING SCREW, ZP
8	6	Hex Bolt - 7/16"-14 x 4-1/2"
9	18	7/16 SAE WASHER-ZP-GrNC
10	6	7/16-14 UNC-Nylon Lock Nut-ZP-GrNC

jaypro sports
976 Hartford Turnpike
Waterford, CT 06385 USA
(800)243-0533 Fax: (800)988-3363
www.jaypro.com

MODEL NUMBER:	CHECKED BY:
BBCFP-20 / SBCFP-200	MT

PRODUCT NAME: 20' Collegiate Baseball / Softball Foul Pole

DATE:	REV:	DRAWN BY:	SHEET:
1/28/2021	C	Moune T.	1 OF 1